THIS DRAWING IS UNPUBLISHED. RELEASED FOR PUBLICATION -,- .
© COPYRIGHT 2010 BY TYCO ELECTRONICS CORPORATION. ALL RIGHTS RESERVED.

LOC	DIST
DW	—

REVISIONS

P	LTR	DESCRIPTION	DATE	DWN	APVD
	A	RELEASED.	01JUN'11	J.C.	W.K.

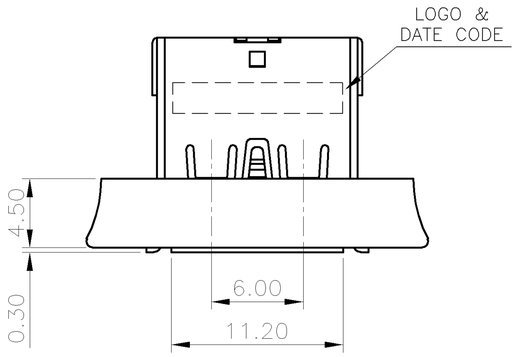

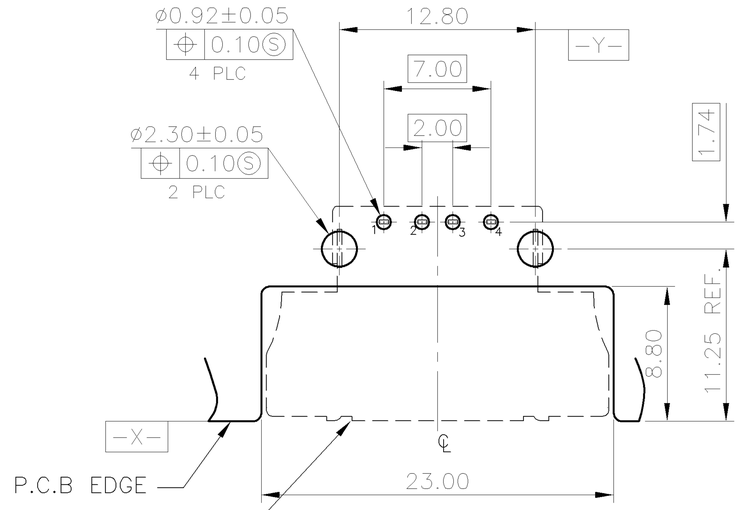

RECOMMENDED P.C.B LAYOUT
TOP VIEW, TOLERANCE: ±0.05

NOTES:
1. MATERIAL:
   1.1 HOUSING: PA6T WITH 30% GF, UL 94V-0; COLOR: BLACK
   1.2 LOCK DEVICE: PA66 WITH 30% GF, UL 94V-0; COLOR: BLUE(2718C)
   1.3 CONTACT: PHOSPHOR BRONZE.
   1.4 SHELL: BRASS
   1.5 SHELL COVER: BRASS
2. FINISH:
   2.1 CONTACT:
      0.762um [30u"] MIN. GOLD PLATING ON CONTACT AREA.
      2.54um [100u"] MIN. BRIGHT-TIN PLATING ON SOLDERTAIL.
      1.27um [50u"] MIN. NICKEL UNDERPLATING OVERALL.
   2.2 SHELL & SHELL COVER: 2.54um [100u"] MIN. NICKEL PLATING OVERALL.
3. RECOMMENDED P.C.B THICKNESS : 1.6mm
4. WAVE SOLDER CAPABLE TO 265°C PER TE SPEC. 109-202, CONDITION B.

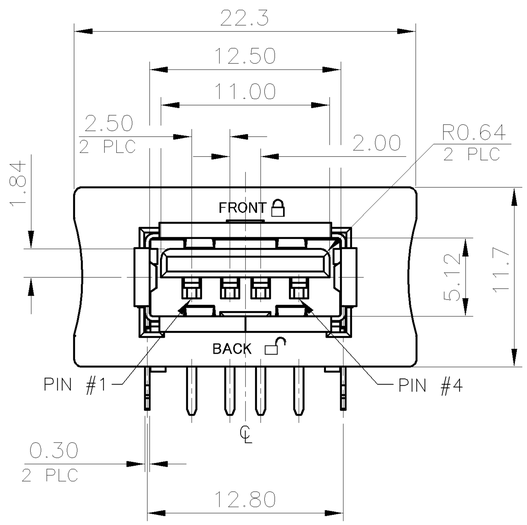

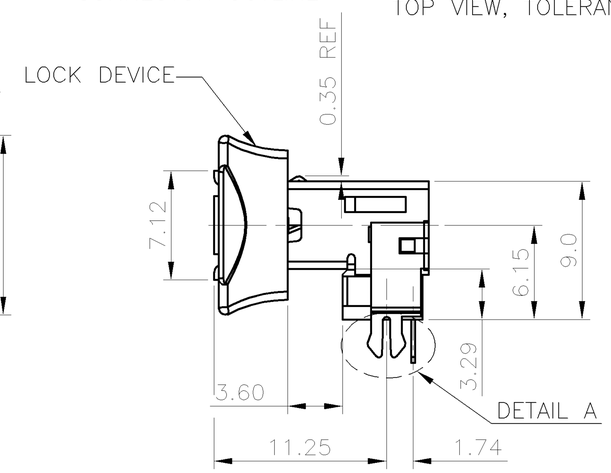

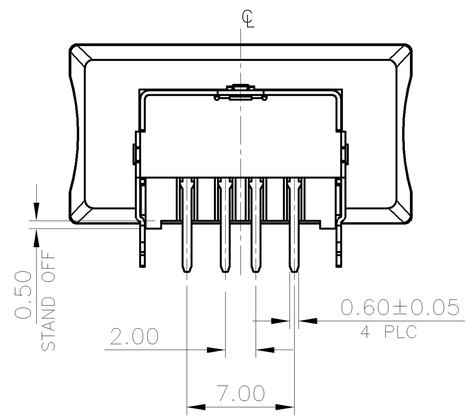

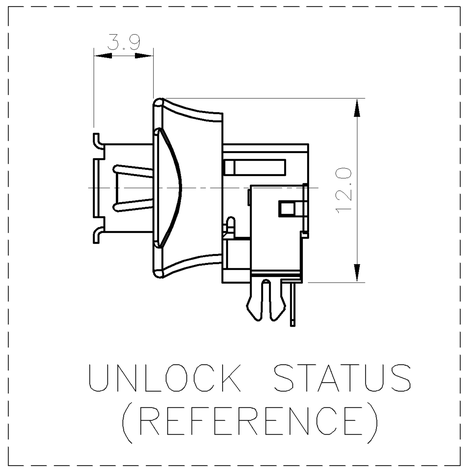

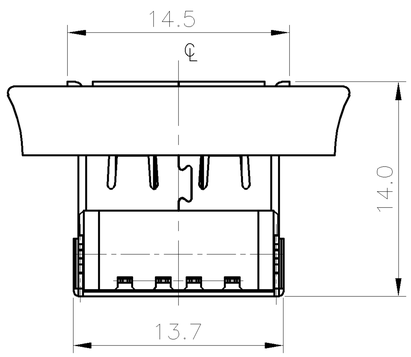

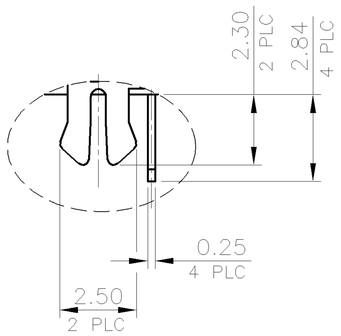

DETAIL A
SCALE 2:1

TRAY	2041370-1
PACKAGE	PART NUMBER

THIS DRAWING IS A CONTROLLED DOCUMENT.

DIMENSIONS: mm

TOLERANCES UNLESS OTHERWISE SPECIFIED:

0 PLC	± -
1 PLC	± 0.3
2 PLC	± 0.2
3 PLC	± 0.15
4 PLC	± -
ANGLES	± 3°

MATERIAL: SEE NOTE
FINISH: SEE NOTE

DWN	J. CHEN	01JUN2011
CHK	S. CHIEN	01JUN2011
APVD	W. KODAMA	01JUN2011

PRODUCT SPEC: 108-57878
APPLICATION SPEC: —
WEIGHT: 3.065 GRAMS

TE Connectivity

NAME: USB A TYPE, RECEPTACLE, RIGHT ANGLE DIP, WITH LOCK DEVICE, CH=6.15mm

SIZE	CAGE CODE	DRAWING NO	RESTRICTED TO
A3	00779	C-2041370	—

CUSTOMER DRAWING | SCALE — | SHEET 1 OF 2 | REV A

THIS DRAWING IS UNPUBLISHED. RELEASED FOR PUBLICATION -,- .
© COPYRIGHT 2010 BY TYCO ELECTRONICS CORPORATION. ALL RIGHTS RESERVED.

LOC	DIST
DW	—

REVISIONS

P	LTR	DESCRIPTION	DATE	DWN	APVD
		SEE SHEET 1.			

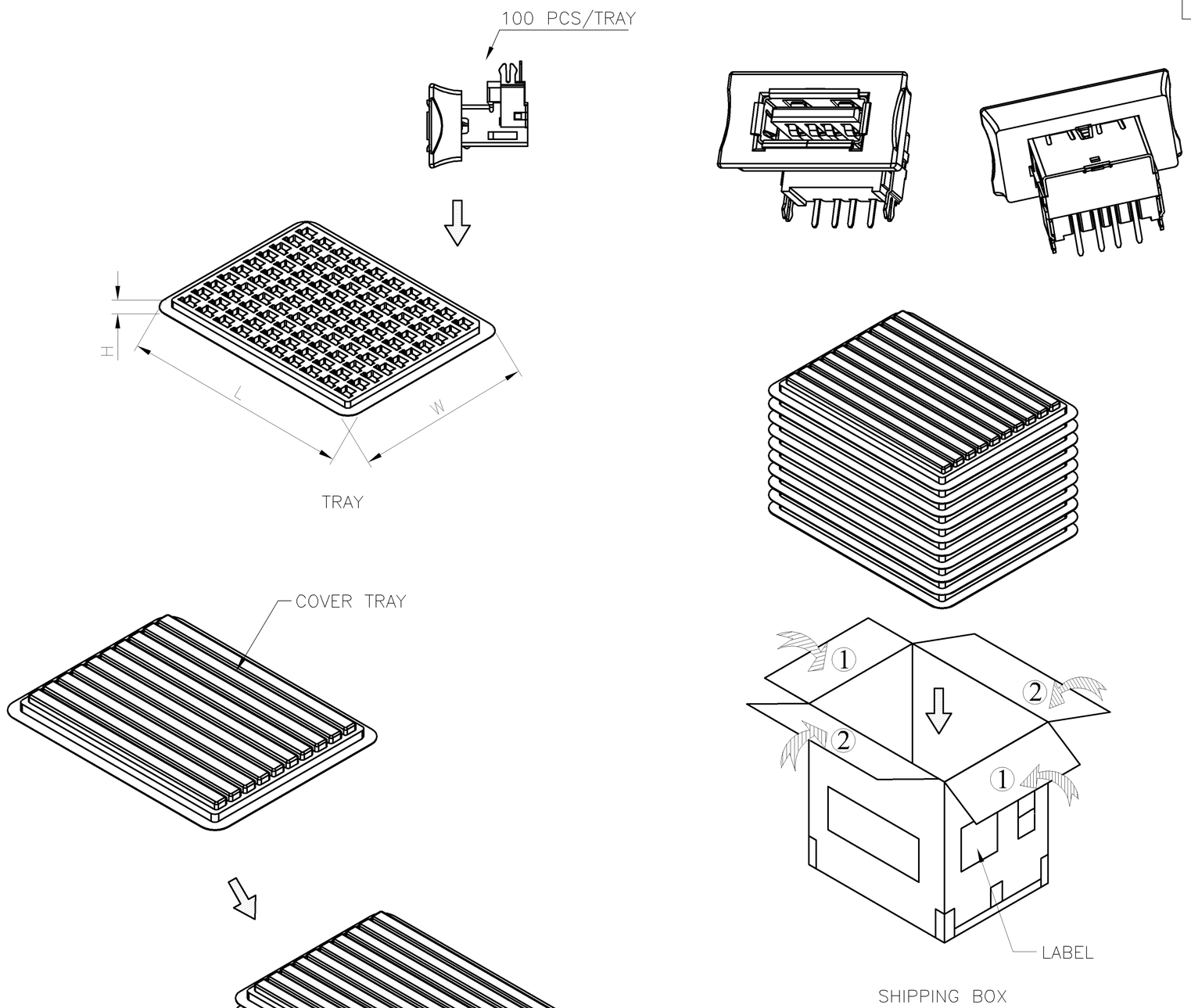

NOTES:

1. MATERIAL:
   TRAY: PVC
   SHIPPING CARTON: CORRUGATED FIBERBOARD
2. DIMENSION:
   TRAY: L=320, W=250, H=15.
   SHIPPING BOX: L=330, W=260, H=165.
3. QUANTITY: SEE TABLE
4. SHIPPING BOX WEIGHT: SEE TABLE

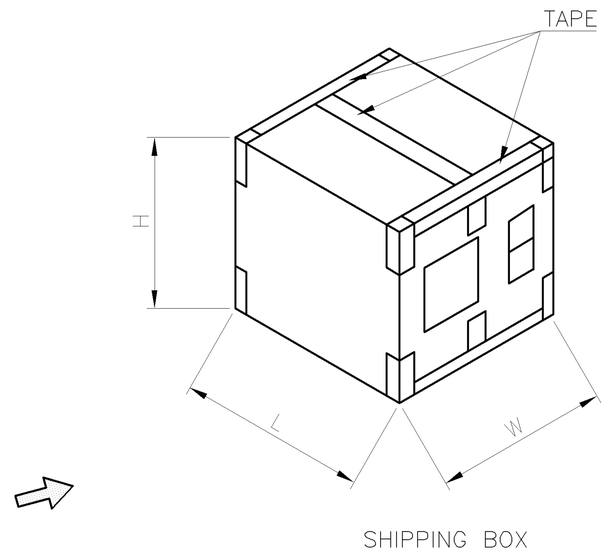

GROSS WEIGHT	NET WEIGHT	PCS/ TRAY	TRAYS/ BOX	PCS/ BOX	PART NUMBER
4.0 KG	3.1 KG	100	10	1000	2041370-1

THIS DRAWING IS A CONTROLLED DOCUMENT.

DIMENSIONS: mm

TOLERANCES UNLESS OTHERWISE SPECIFIED:
0 PLC ± –
1 PLC ± –
2 PLC ± –
3 PLC ± –
4 PLC ± –
ANGLES ± –

MATERIAL –

FINISH –

DWN –
CHK –
APVD –
PRODUCT SPEC –
APPLICATION SPEC –
WEIGHT –

TE Connectivity

NAME
USB A TYPE, RECEPTACLE, RIGHT ANGLE
DIP, WITH LOCK DEVICE, CH=6.15mm

SIZE	CAGE CODE	DRAWING NO	RESTRICTED TO
A3	00779	C-2041370	—

CUSTOMER DRAWING | SCALE — | SHEET 2 OF 2 | REV A