Apr.1.2017 Copyright 2017 HIROSE ELECTRIC CO., LTD. All Rights Reserved.

	COUNT	DESCRIPTION OF REVISIONS	BY	CHKD	DATE		COUNT	DESCRIPTION OF REVISIONS	BY	CHKD	DATE
△					. .	△					. .
△					. .	△					. .
△					. .	△					. .

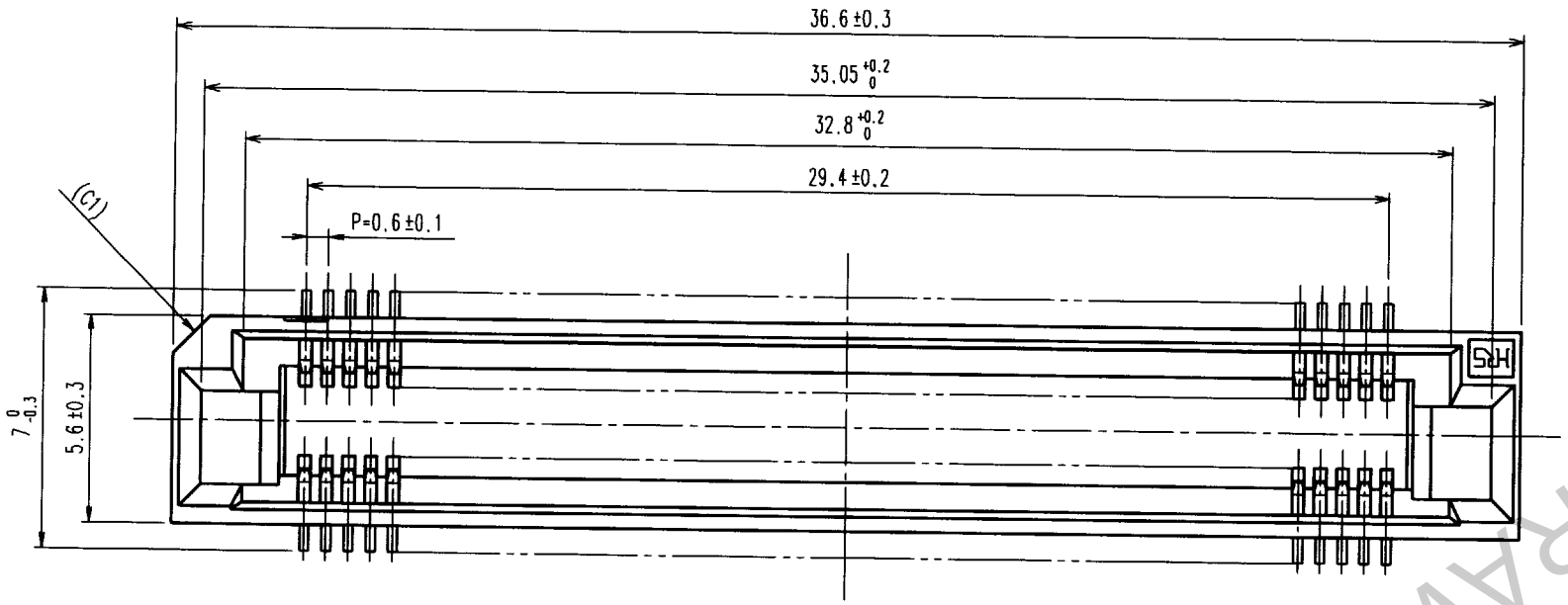

RECOMMENDED LAND PATTERN DIMENSION OF PCB (MOUNTING SIDE) (2:1)

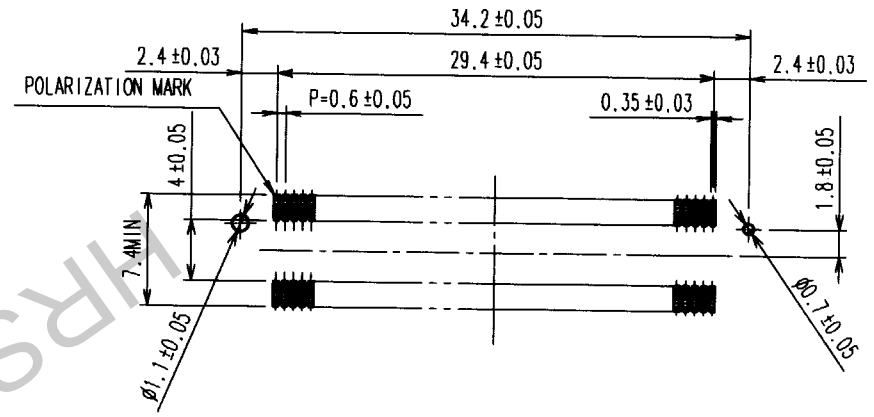

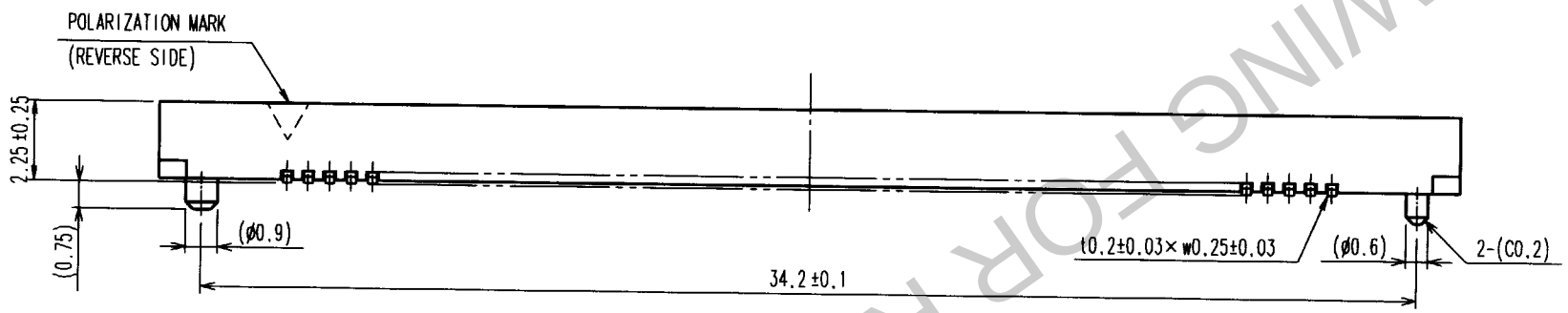

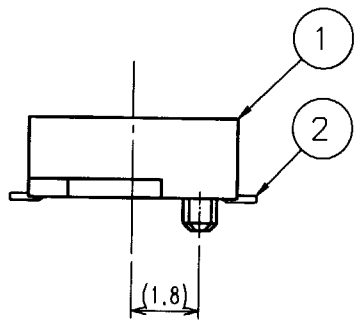

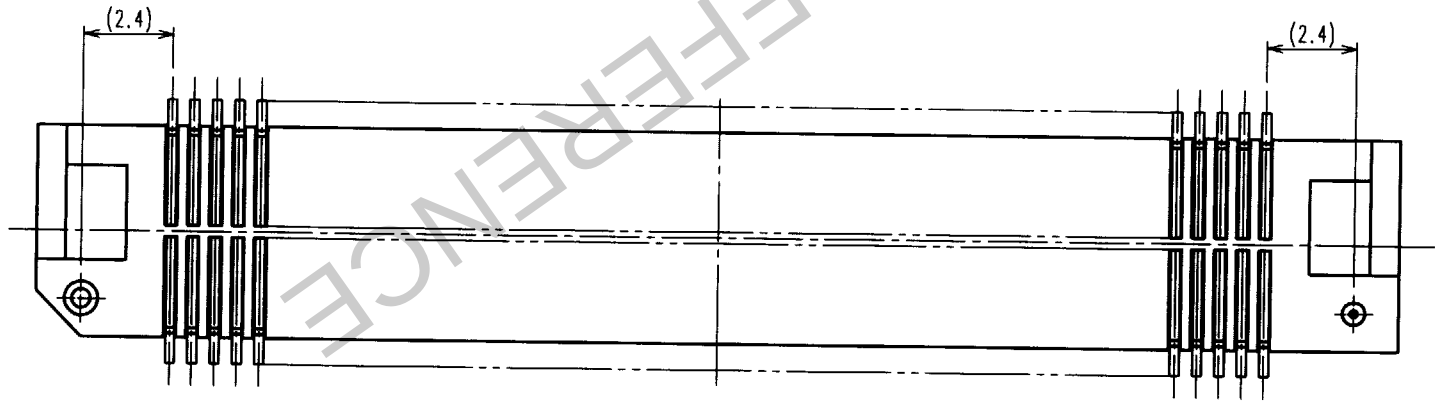

NOTE
1. LEAD CO-PLANARITY SHALL BE 0.1mm.
2. EMBOSSED CARRIER TAPE PACKAGING SHALL BE APPLIED FOR THIS PRODUCT. SEE SHEET 2/2 FOR DETAILS.
3. THIS PRODUCT HAS TAPE FOR VACUUM PICKUP. SEE SHEET 2/2 FOR DETAILS OF STICKING POSITION ,ETC.
4. FOR MODIFICATION ,ETC., PREVENTIVE HOLE FOR SINK MARK MAY BE ADDED ACCORDING TO CIRCUMSTANCES.

NO.	MATERIAL	FINISH, REMARKS	NO.	MATERIAL	FINISH, REMARKS
1	PPS	LIGHT BROWN UL94V-0	2	PHOSPHOR BRONZE	CONTACT AREA:GOLD PLATED (0.1μm) OVER NICKEL THE OTHER AREA:GOLD PLATED (FLASH) OVER NICKEL

CODE NO.(OLD)	DRAWN	DESIGNED	CHECKED	APPROVED	RELEASED
CL	K.Kiriya 01.04.24	H.Yamaguchi 01.04.25	H.Okawa 01.04.25	J.Yoshimura 01.04.25	. .

SCALE	DRAWING NO.	PART NO.
5 : 1	EDC3-150676-01	FX8-100S-SV(23)
UNITS mm	HRS HIROSE ELECTRIC CO., LTD	CODE NO. CL578-0205-6-23

1/2

TO
PCK

HRS DRAWING FOR REFERENCE

Apr.1.2017 Copyright 2017 HIROSE ELECTRIC CO., LTD. All Rights Reserved.

COUNT	DESCRIPTION OF REVISIONS	BY	CHKD	DATE	COUNT	DESCRIPTION OF REVISIONS	BY	CHKD	DATE

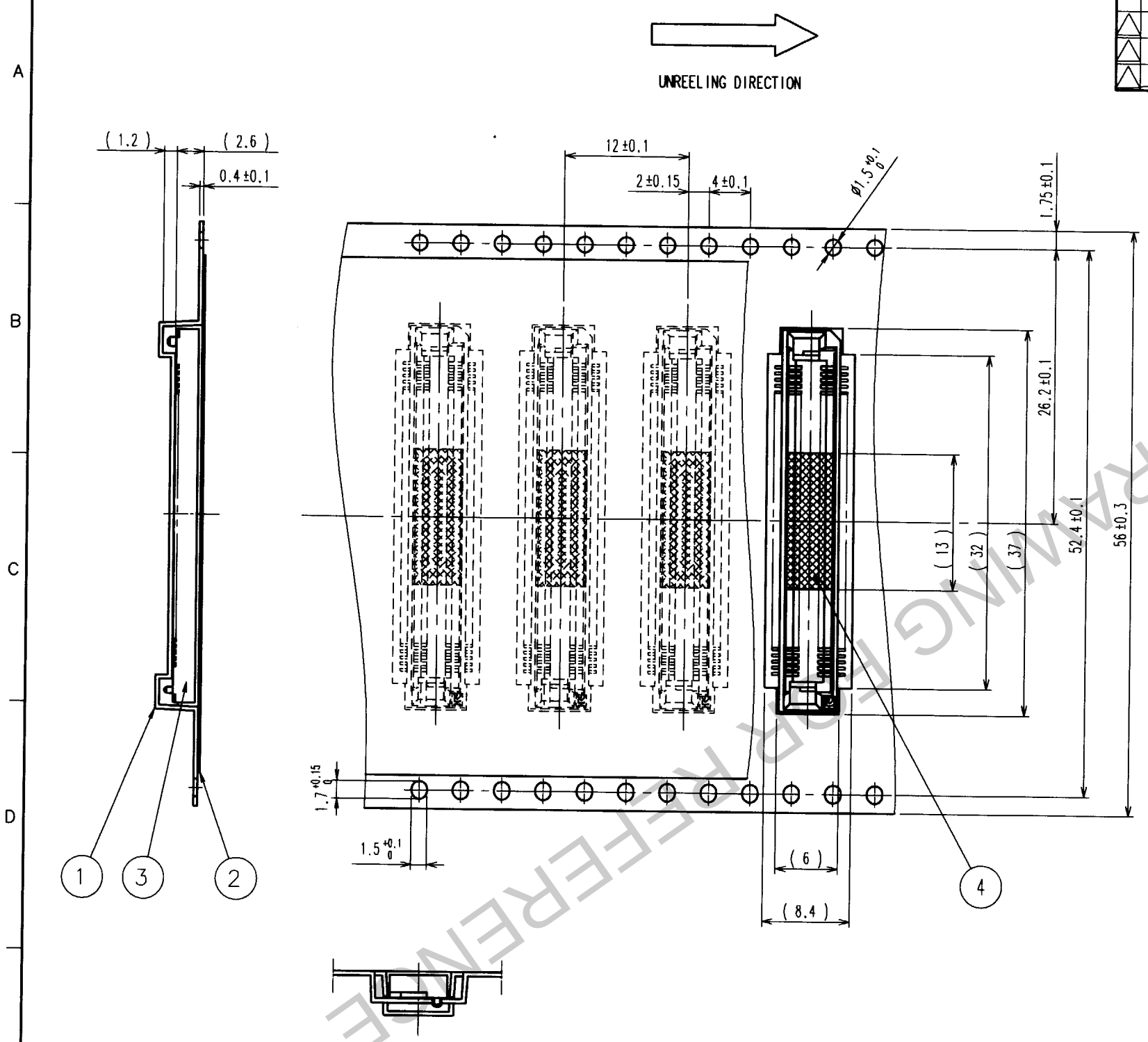

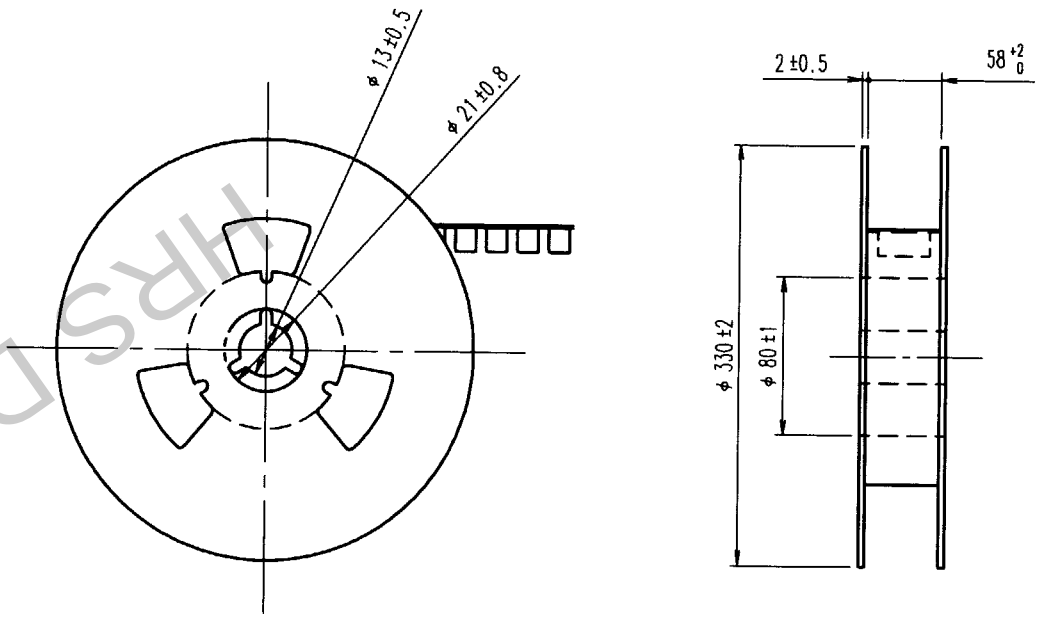

REELED DIMENSION (FREE)

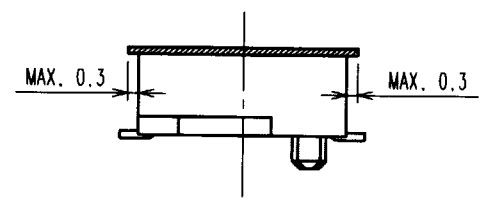

DETAIL FOR TAPE VACUUM PICKUP (5:1)

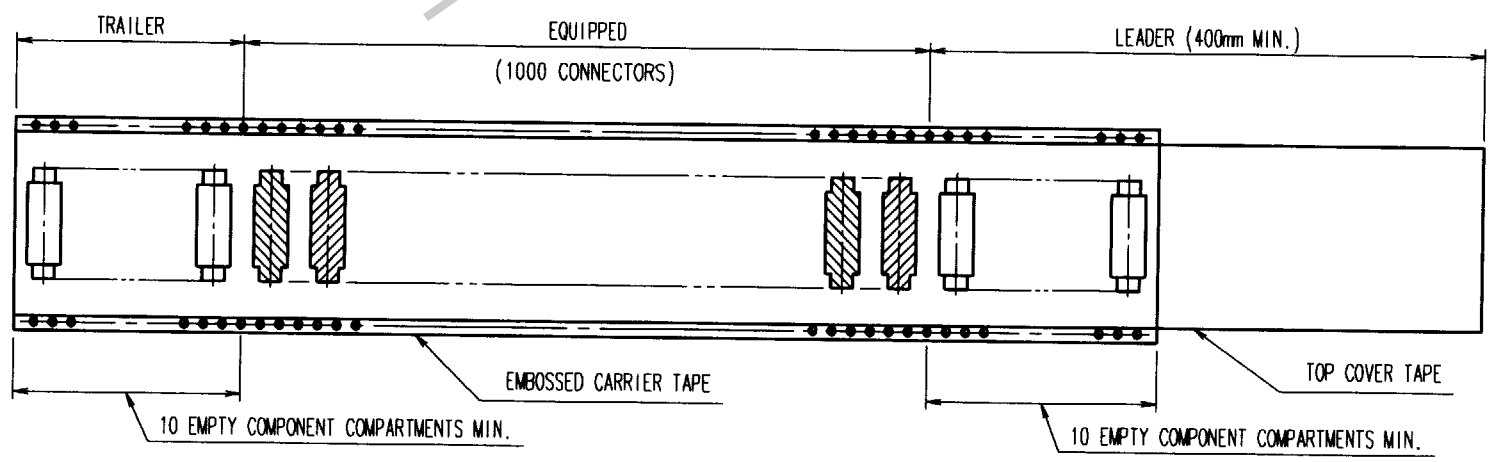

NOTE 1. 1REEL:1000 CONNECTORS

NO.	MATERIAL	FINISH, REMARKS	NO.	MATERIAL	FINISH, REMARKS
2	POLYESTER	TOP COVER TAPE	4	POLYIMIDE	(TAPE FOR VACUUM PICKUP)
1	PET	EMBOSSED CARRIER TAPE	3		(CONNECTORS)

CODE NO.(OLD)	DRAWN	DESIGNED	CHECKED	APPROVED	RELEASED
CL	H. Kiriya 01.04.24	H. Yamaguchi 01.04.25	H. Okawa 01.04.25	J. Jochimura 01.04.25	. .

SCALE	DRAWING NO.	PART NO.
2 : 1	EDC3-150676-01	FX8-100S-SV(23)
UNITS mm	HRS HIROSE ELECTRIC CO., LTD	CODE NO. CL578-0205-6-23

2

TO
PCK

HRS DRAWING FOR REFERENCE