THIS DRAWING IS UNPUBLISHED. RELEASED FOR PUBLICATION -,- .
© COPYRIGHT - By - ALL RIGHTS RESERVED.

LOC	DIST
CM	00

REVISIONS

P	LTR	DESCRIPTION	DATE	DWN	APVD
	H5	REVISED PER ECO-11-020968	18OCT11	JR	SM

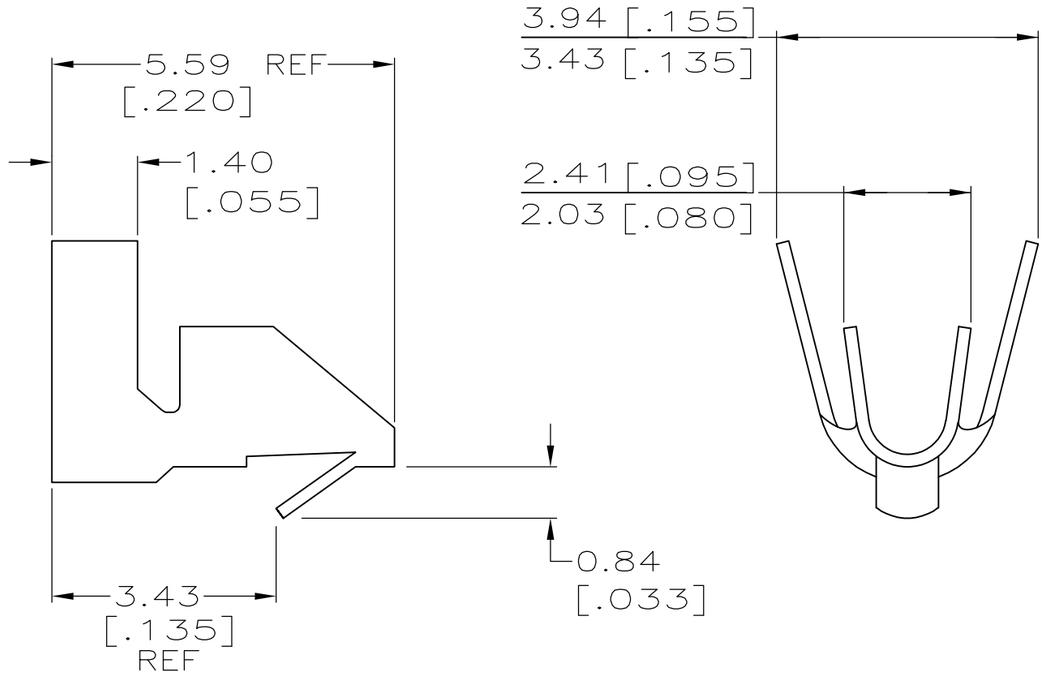

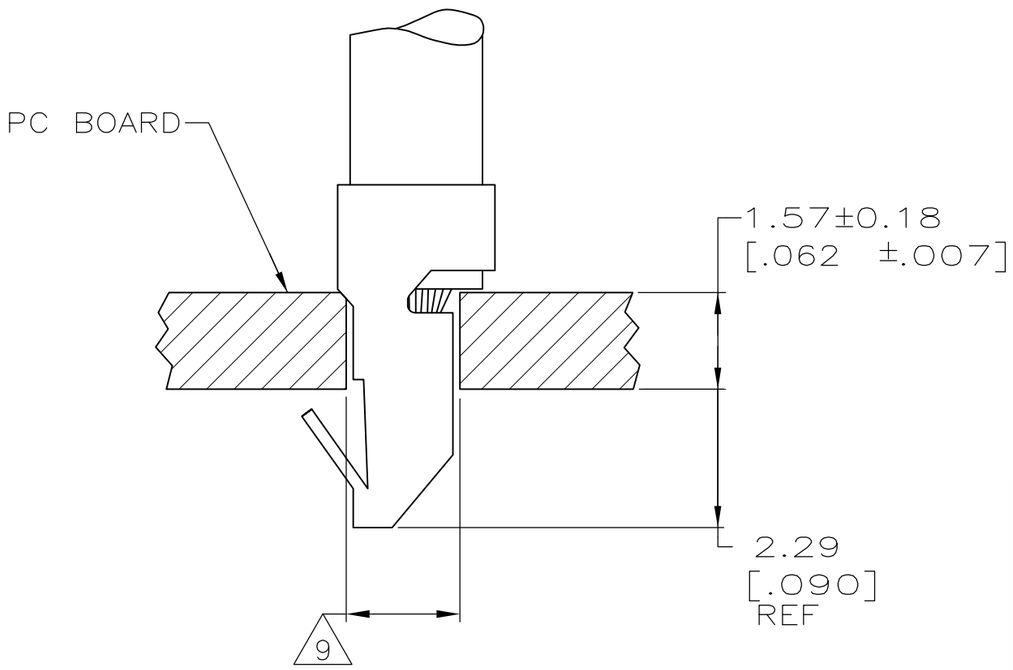

1. PARTS COMPLY WITH AMP SOLDERABILITY SPEC 109-11-3.
2. WIRE RANGE: 0.3 – 0.9 mm^2 (22 – 18 AWG).
3. INSULATION RANGE: 1.52 – 2.79 [.060 – .110] DIA.
4. 0.00254 [.000100] MIN BRIGHT TIN-LEAD OVER 0.00203 [.000080] MIN MATTE COPPER.
5. 0.00508 [.000200] MIN BRIGHT TIN-LEAD.
6. DIMENSIONS IN BRACKETS ARE IN INCHES.
7. FOR FOREIGN PRODUCTION ONLY.
8. 4µm [.00016] MIN BRIGHT TIN PLATING.
9. HOLE DIAMETER TO BE 1.83±0.08 FOR WIRE 0.3-0.6mm2 (20-22 AWG) OR 1.96±0.08 FOR WIRE 0.8-0.9mm2 (18 AWG).

	FINISH	MATERIAL	PART NUMBER
	8	0.20[.008] PHOS BRONZE	3-770565-2
	8	0.20[.008] BRASS	3-770565-1
	4 7	0.20[.008] BRASS	770565-3
	5	0.20[.008] PHOS BRONZE	770565-2
OBSOLETE	4	0.20[.008] BRASS	770565-1

THIS DRAWING IS A CONTROLLED DOCUMENT.

DIMENSIONS: mm [INCHES]

TOLERANCES UNLESS OTHERWISE SPECIFIED:
0 PLC ± –
1 PLC ± –
2 PLC ± –
3 PLC ± 0.13[.005]
4 PLC ± –
ANGLES ± –

MATERIAL: SEE TABLE
FINISH: SEE TABLE

DWN B. LEWIS 12-20-89
CHK R. SWING 12-21-89
APVD W. LONG 12-21-89
PRODUCT SPEC —
APPLICATION SPEC —
WEIGHT —

TE Connectivity

NAME: MINI AMP-IN —

SIZE	CAGE CODE	DRAWING NO	RESTRICTED TO
A3	00779	C-770565	—

CUSTOMER DRAWING | SCALE 10:1 | SHEET 1 OF 1 | REV H5