THIS DRAWING IS UNPUBLISHED. RELEASED FOR PUBLICATION -,- .
© COPYRIGHT 2011 BY TYCO ELECTRONICS CORPORATION. ALL RIGHTS RESERVED.

LOC	DIST
DW	—

REVISIONS

P	LTR	DESCRIPTION	DATE	DWN	APVD
	A	REVISED (ECO-11-013077)	23JUN'11	J.C.	W.K.

NOTE:

1. MATERIAL:
   HOUSING: THERMOPLASTIC HIGH TEMP., UL 94V-0 COLOR: GRAY.
   CONTACT: PHOSPHOR BRONZE, THICKNESS: 0.25mm.
   SHIELD: PHOSPHOR BRONZE, THICKNESS: 0.40mm.
2. FINISH:
   CONTACT: GOLD FLASH OVER
   30u" MIN. PALLADIUM-NICKEL PLATING ON CONTACT AREA,
   100u" MIN. MATTE-TIN PLATED ON SOLDER TAILS
   50u" MIN. NICKEL UNDERPLATED ALL OVER.
   SHIELD: 100u" MIN. HALF-BRIGH TIN PLATED OVER 80u" MIN. Cu UNDERPLATED ALL OVER.
3. REFLOW SOLDER CAPABLE TO 260°C PER TE SPEC 109-201, CONDITION B.
4. RoHS 2002/95/EC COMPLIANT
5. CHOOSE PRE-FIX FROM LEFT TABLE AND SUFFIX FROM RIGHT TABLE FOR DESIRED PART NUMBER COMBINATION.

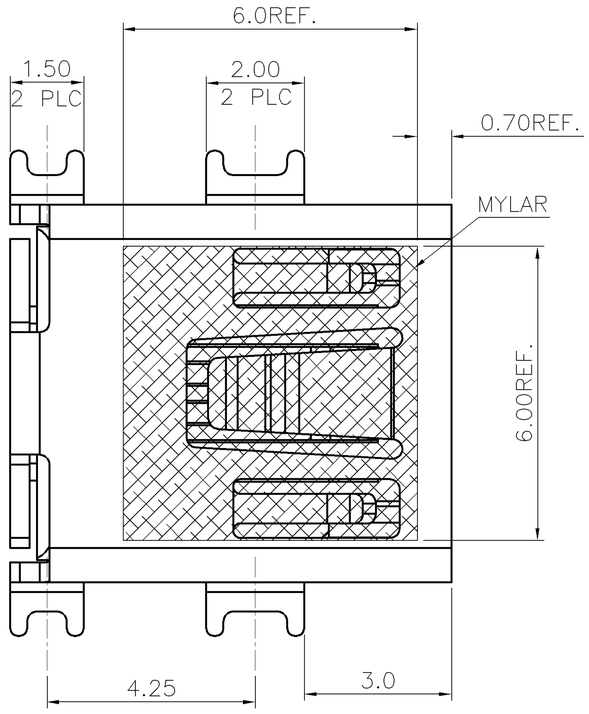

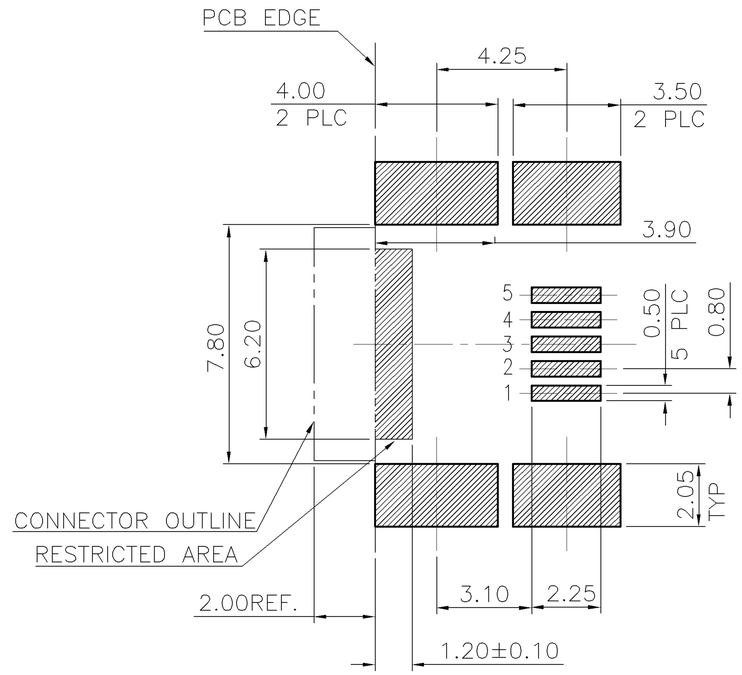

RECOMMENDED PCB LAYOUT (MOUNTING SIDE)
(TOP VIEW) (TOLERANCE=±0.05)

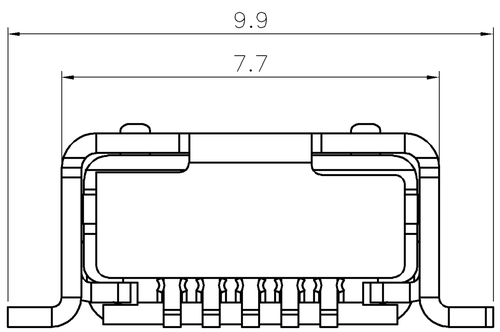

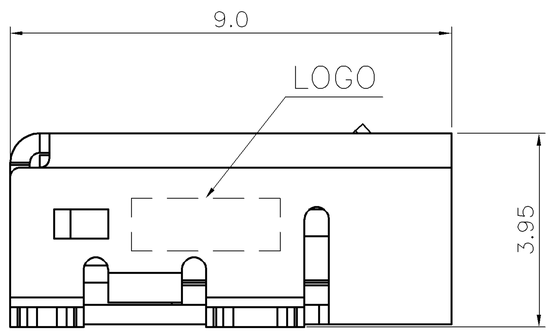

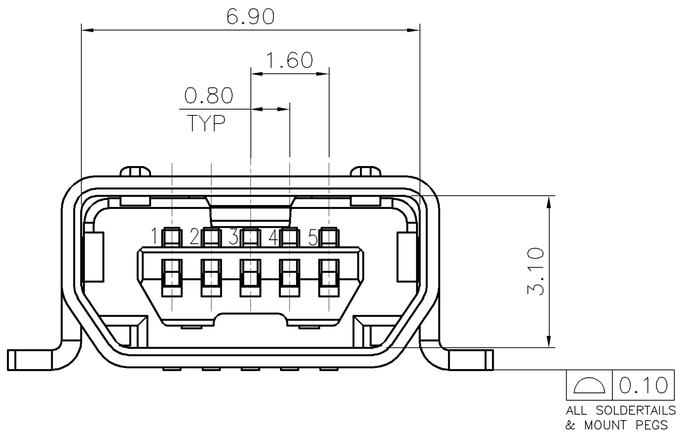

1775051-1
PART NUMBER

THIS DRAWING IS A CONTROLLED DOCUMENT.

DIMENSIONS: mm

TOLERANCES UNLESS OTHERWISE SPECIFIED:

0 PLC	± 0.50
1 PLC	± 0.38
2 PLC	± 0.25
3 PLC	± 0.10
4 PLC	± –
ANGLES	± 3°

MATERIAL: SEE NOTE
FINISH: SEE NOTE

DWN	O. HU	10MAR2005
CHK	S. HOU	10MAR2005
APVD	W.J. KE	10MAR2005

PRODUCT SPEC: 108-57509
APPLICATION SPEC: —
WEIGHT: 10.5 GRAMS
CUSTOMER DRAWING

TE Connectivity

NAME: MINI USB CONN., RCPT, 5 POS, SMT, AB TYPE

SIZE	CAGE CODE	DRAWING NO	RESTRICTED TO
A3	00779	C-1775051	—

SCALE	SHEET	REV
—	1 OF 2	A

THIS DRAWING IS UNPUBLISHED. RELEASED FOR PUBLICATION -,- .
© COPYRIGHT 2011 BY TYCO ELECTRONICS CORPORATION. ALL RIGHTS RESERVED.

LOC	DIST
DW	—

REVISIONS

P	LTR	DESCRIPTION	DATE	DWN	APVD
		SEE SHEET 1.			

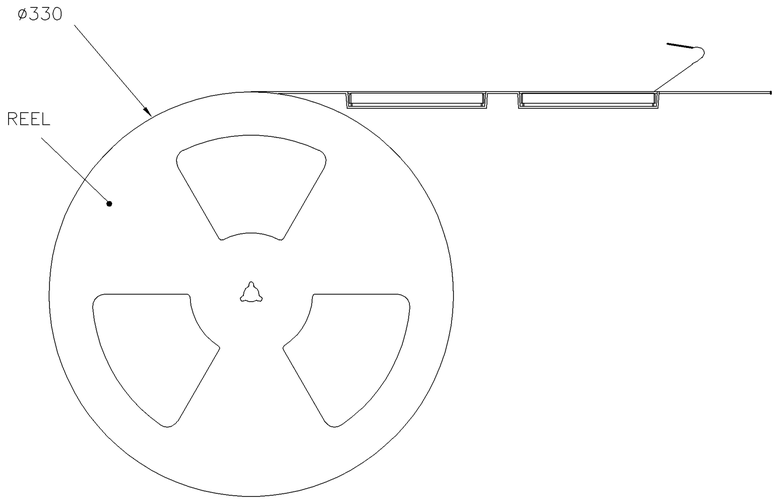

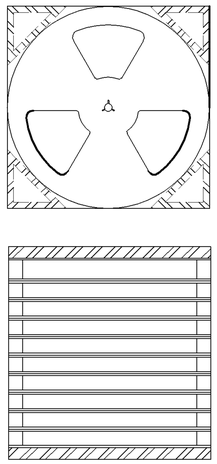

1 REEL/BAG

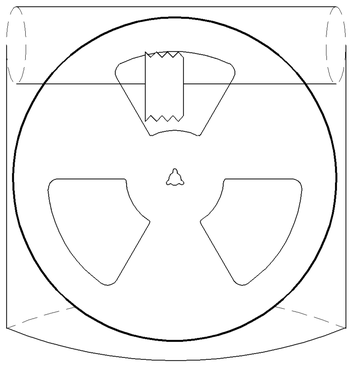

NOTES :
1. MATERAL :
   1.1 EMBOSSED CARRIER: PS
   1.2 COVER TAPE: PET
   1.2 SHIPPING CARTON: CORRUGATED FIBER.
2. DIMENSION :
   2.1 REEL: W=24 ,øA=330
   2.2 SHIPPING CARTON: L=349.2,W=147.6, H=156.
3. QUANTITY :
   3.1 PRIMARY PACKING: 700PCS/REEL.
   3.2 SECONARY PACKING: 10REEL/ CARTON(7000PCS).
4. WEIGHT :
   4.1 NET WEIGHT: 11.5kg/CARTON.
   4.2 GROSS WEIGHT: 10.5kg/CARTON.
5. PEELING RESISTANCE: 10g~130g.
6. PELLING SPEED: 300mm/minutes.

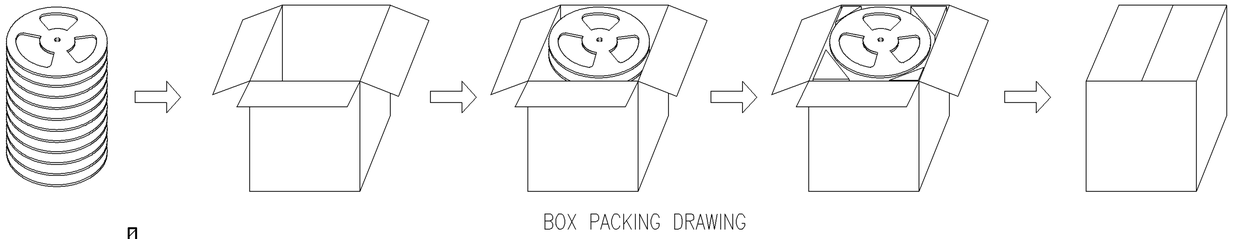

BOX PACKING DRAWING

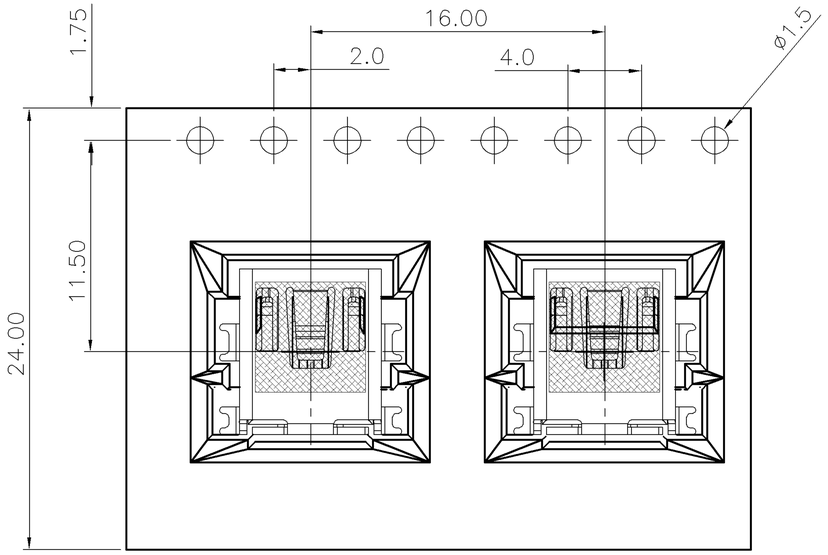

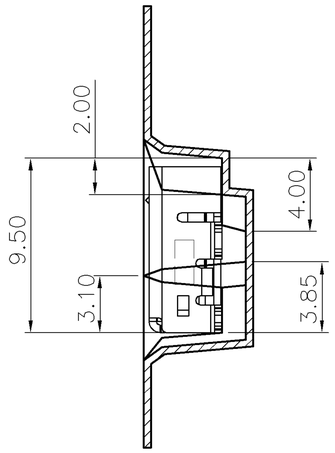

USER FEED DIRECTION

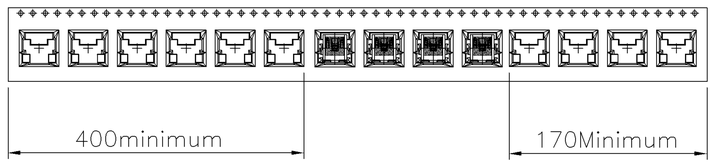

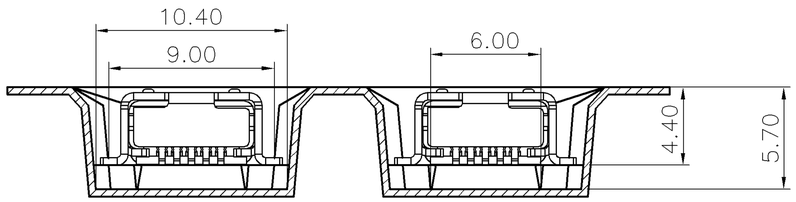

THIS DRAWING IS A CONTROLLED DOCUMENT.

DIMENSIONS: mm

TOLERANCES UNLESS OTHERWISE SPECIFIED:

0 PLC	± –
1 PLC	± –
2 PLC	± –
3 PLC	± –
4 PLC	± –
ANGLES	± –

MATERIAL –

FINISH –

DWN –
CHK –
APVD –
PRODUCT SPEC –
APPLICATION SPEC –
WEIGHT –

TE Connectivity

NAME

MINI USB CONN., RCPT,
5 POS, SMT, AB TYPE

SIZE	CAGE CODE	DRAWING NO	RESTRICTED TO
A3	00779	C-1775051	—

CUSTOMER DRAWING

SCALE	SHEET	REV
—	2 OF 2	A