UNIT:mm

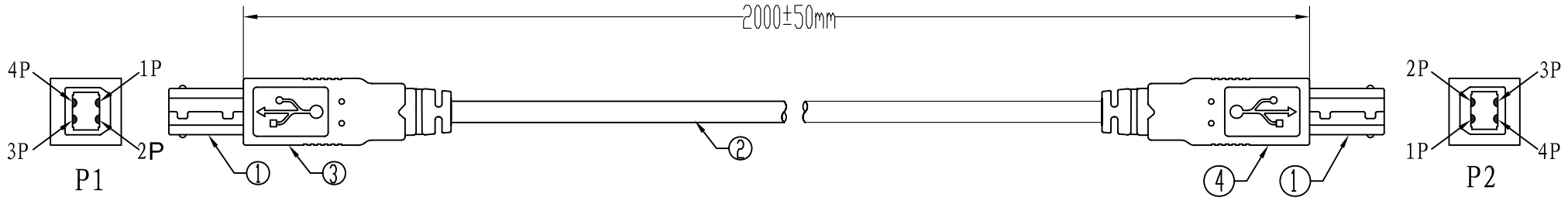

CABLE BLACK PRINT
USB CABLE E189529 AWM 2725 28AWG/1PR AND
24AWG/2C 80℃ 30V VW-1

PIN ASSIGNMENT:

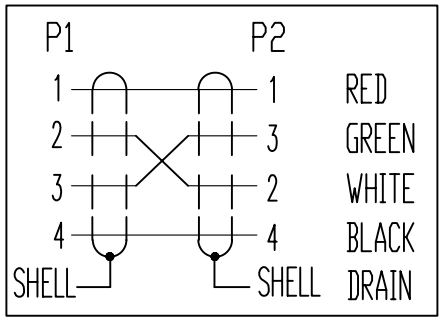

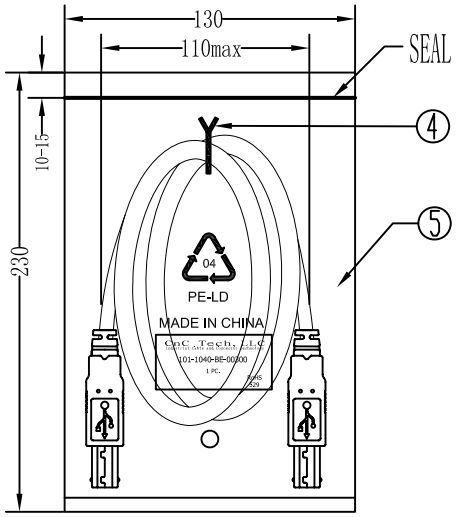

1PC/PE BAG

Electrical test:
1.100% short,open,miswire test
2.Conduct resistance:2 Ohm(max)
3.Insulation resistance:5Mohm(min)
4.dielectric test:DC 300V

NO.	NAME	Q'TY	SPECIFICATION
⑥	PE BAG	1/10	CLEAR SIZE:280*330*0.05mm PRINT BLACK"MADE IN CHINA"+"10PCS".
⑤	PE BAG	1	CLEAR SIZE:130*230*0.05mm PRINT BLACK"MADE IN CHINA"+"1PC".
④	TIE	1	WHITE L=100mm
③	OUT JACKET	12g	BEIGE(IV-29#) PVC-40P (MOULD NO:WM-65)
②	CABLE	1	BEIGE(IV-29#) USB2.0 UL2725 28#/1P+24#/2C+AEB OD:4.7mm L=2000±10MM
①	CONN	2	USB2.0 B MALE NICKEL PIN G/F 3PCS TYPE INSULATOR COLOR:WHITE

CnC Tech, LLC
Industrial Cable and Connector Technology

DRAWED	ZHONGHS	DRAWING NO	
CHECKED		CUSTOMER	
APPROVAL		ITEM NO.	101-1040-BE-00300
DECIDED		DATE	2012-02-16
VERSIONS/EDITEON	A/0	PROJECTION	